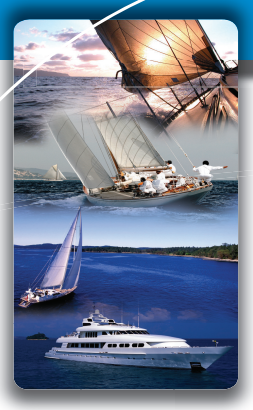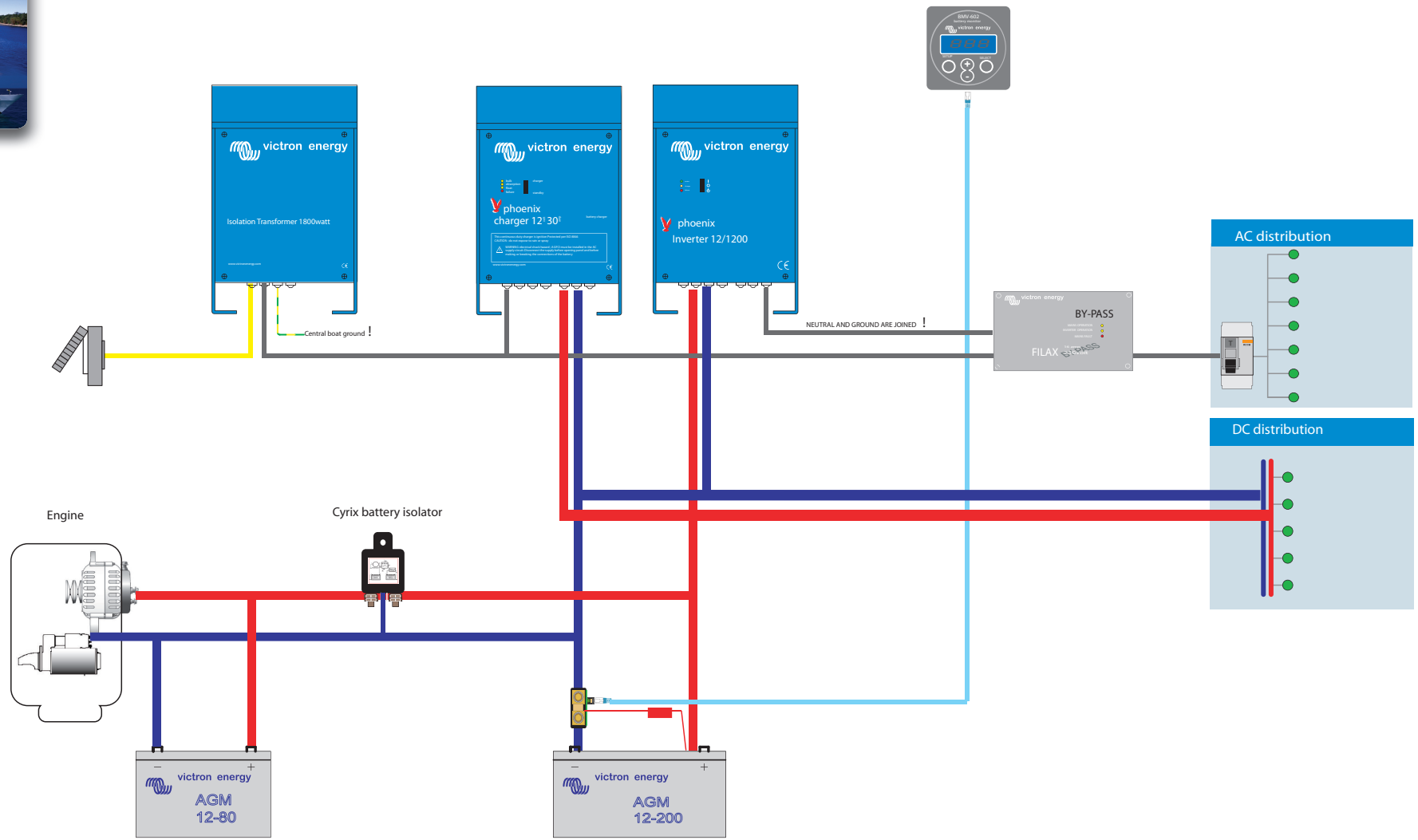PHOENIX CHARGER AND INVERTER